Tangit PVC-U PLUS

CHARACTERISTICS

- For bonding of thermoplastic PVC-U piping systems under pressure acc. EN1452 and EN ISO 15493.
- Used for non-pressure piping systems acc. EN1329
- Solvent-containing adhesive based on Methylethylketone (Butanone-2)
- Open time of approx. 3 minutes
- Gap filling and thixotropic
- Tangit PVC-U PLUS complies with the requirements of EN 14814, Adhesives for thermoplastic piping systems for fluids under pressure and EN 14680 Adhesives for non-pressure thermoplastic piping systems.
- CE Marking and DoP (01188) PN16 / PVC-U





APPROVALS

TZW Certificate acc. KTW UBA Guideline
ACS Certificate by EUROFINS

Tangit PVC-U PLUS is supervised by:
KIWA Nederland B.V. applied

RESISTIBILITY

The bonded joints are waterproof. Their chemical resistance, especially to inorganic acids, depends on pipe tolerances, curing times, pressure loads, temperatures, acid type and acid concentration.

APPLICATION FIELD

For bonding of PVC-U pressure piping systems acc. EN 14814 with diameter tolerances up to +0.6 mm and non-pressure piping systems acc. EN14680 made from PVC-U according to EN ISO 15493 (PVC-U) EN 1452 and EN 1329. Not suitable for flexible PVC, please contact Technical Service.

INSTRUCTIONS FOR USE

Preparation of pipes

If pipe ends and sockets have not yet been prepared according to the illustrations below, they must be chamfered and deburred. No tight and durable bond can be produced unless pipes have been properly chamfered.

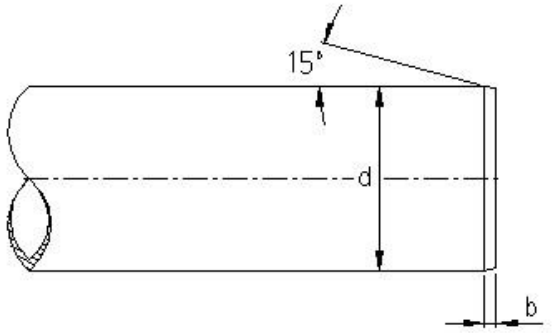

Pipe outside diameter d (mm)	Dimensions b about (mm)
up to 16	1-2
20-50	2-3
63-225	3-6
250-400	6-8

Pretreatment

Remove heavy dirt adherent to the surfaces to be bonded (pipe end outside, socket inside). Then measure the fitting insertion depth (= bond length) and mark it on the pipe end so that the application of the required amount of adhesive and the complete insertion of the pipe can be checked.

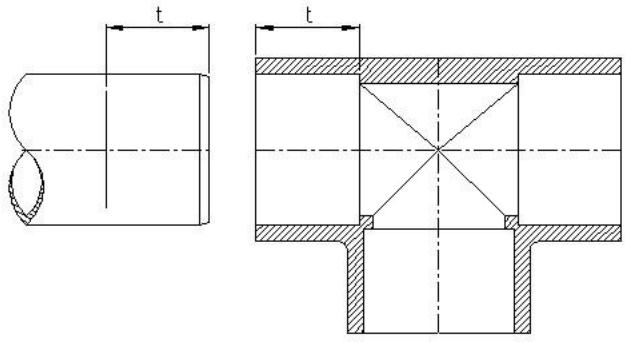

Outside pipe diameter Ø (mm)	16	20	25	32	40	50	63	75	90	110	140	160	225	280	315
Insertion depth t (mm)	14	16	19	22	26	31	38	44	51	61	76	86	119	146	164

Final cleaning is done using Tangit Cleaner PVC-U/C/ABS. Spray the cleaner onto white tissue paper and thoroughly clean the dry surfaces to be bonded so that they are free of dirt and grease. Use a new piece of tissue paper for each cleaning operation. The cleaned surfaces must be dry before applying the adhesive. Any ice must be removed by careful heating.

Application

Stir Tangit PVC-U well before use. The adhesive should flow slowly off a stick held at an angle, forming a trail. In an axial direction apply a uniform coat of adhesive - first to the inside of the socket, then to the pipe. Apply thinly inside the socket in order to avoid the detrimental formation of beads inside the pipe, but apply generously to the pipe end.

Tangit PVC-U is able to bridge gaps (caused by pipe tolerances) of up to +0.6 mm in compliance with EN 14814.

Recommended brush sizes:

d32	8 mm round brush
d40 - d63	1"-flat brush
d75 - d160	2"-flat brush
d225 - d280	2.5"-flat brush
above d300	3"-flat brush

Immediately insert the pipe into the socket to stop resp. to full depth, without twisting or jamming. Hold fast for several seconds until the adhesive begins to dry. From d160 upwards, insertion is facilitated by using a pipe joiner. Remove any excess adhesive with tissue paper immediately after joining. As the adhesive cures rapidly, the components must be completely joined within 2 minutes after application. Since the application of Tangit in tubes is more time consuming, this procedure should not be

applied with pipes exceeding d90. From d90 upwards, the adhesive should be applied to pipe and socket simultaneously by two persons.

The open time of Tangit PVC-U, i.e. the time from the start of adhesive application until joining the parts, depends on ambient temperature and/or film thickness of the applied adhesive. With a film thickness of 1 mm, the parts should be joined within the following times:

Temperature °C	Open time minutes approx.
20	3
25	2
30	1

During the first 5 minutes after bonding, the pipes must not be moved. At temperatures below +10°C, this time must be extended to at least 15 minutes. The bonded pipes should be lowered into the trench after 10 to 12 hours. Wait 24 hours after the last bonding before filling the pipes or performing leak tests (up to a test pressure of 1.5 x PN). If the pipeline is to be charged with the operating pressure, a minimum waiting time of 1 hour per bar must be observed. If lines are not to be operated immediately, it is recommended to flush them thoroughly. Leave them filled with water and flush them periodical.

General information

Before start of operation, pipelines must be thoroughly flushed in order to remove residual solvent vapours. Tangit PVC-U is ready for use and must under no circumstances be diluted. Tangit PVC-U and Tangit Cleaner affect PVC-U. Pipes and fittings should therefore not be exposed to spilled adhesive/cleaner. Tightly close containers no longer in use in order to avoid solvent evaporation and thickening. Remove the skin of dried-up adhesive. Strip off thickened adhesive adherent to the brush with dry tissue paper. Cleaned brushes must be dry prior to further use.

Installation

Installation at low temperatures requires utmost care. At temperatures below +5ºC, pipes and fittings tend to be more vulnerable to impact (embrittlement). Long-term exposure to solvent vapours (as may occur during the drying phase when the pipeline is closed) may therefore result in damage to the system. Since Tangit PVC-U cures physically by evaporation, hardening may be slowed down considerably. Special installation techniques are therefore required at temperatures below +5ºC. For this purpose, pipe ends and sockets to be bonded are warmed to +25 to +30ºC by means of a suitable hot-air blower (explosion-proof) and then bonding is done as described above. The finished joint must be kept at +25 to +30ºC for approx. 10 minutes.

The installation of pressure pipes and fittings made of PVC-U requires expertise in the use of these materials. The instructions given here are therefore only meant to support well-trained staff in their work. Please make sure to observe the installation instructions of the pipe and fitting manufacturers as well as the respective guidelines and worksheets of the associations, e.g.

- DVS

- DVGW

- KRV installation instructions

TECHNICAL DATA

Composition	Solvent-containing adhesive based on Butanone-2
Density	0.90 g/cm^3
Heat resistance	60°C
Open time	Approx. 3 minutes
Application temperature	5°C-35°C
Consumption	See table below
Final strength	24 hours
Shelf life	24 months

Consumption:

For the production of one bonded joint the following approximate amounts of adhesive and cleaner are required:

Pipe dimension d (mm)	20	32	50	63	75	90	110	140	160	200	225	315
Tangit Adhesive (g)	3	5	9	15	20	36	60	90	120	200	300	500
Tangit Cleaner (ml)	3	5	9	11	13	14	17	21	25	45	65	102

Please note: The adhesive amounts indicated above are maximum values based on laboratory experience.

The actual consumption in a given application depends on working method, pipe gap and temperature.

LIMITATIONS

Storage

For practical reasons, Tangit should not be stored at temperatures below +5ºC since this leads to a higher viscosity and thickening of the adhesive, thus´ affecting its workability. After conditioning at room temperature and thorough stirring, the temperature-induced viscosity increase and thickening is reduced again.

If stored at +20°C in original packaging shelf life is 24 months. Use before date and batch number are indicated on the packaging resp. at the tube end closure.

HEALTH AND SAFETY

Before using the product please see related Material Safety Data Sheet.

Tangit adhesives and Tangit cleaner are flammable. Solvent vapours are heavier than air. They may accumulate at ground level and form explosive mixtures. Therefore ensure sufficient airing and ventilation during application and drying. No smoking and no welding in the working area and in the rooms adjacent to it! No open light or fire, avoid any sparking or static charge! Accumulated solvent vapours and explosive mixtures must be removed prior to welding. Fill the pipes with water, flush and purge them well. Do not close / seal the pipes while drying. Prolonged inhalation of solvent vapours may be injurious to health. In order to minimize exposure to solvent vapours, keep used tissue paper in closed containers (e.g. buckets with lids). As precaution, protective gloves should be worn to avoid skin contact and maximum cleanliness should be observed (repeatedly wash hands during work and use a greasy skin cream or emulsion).

In case of contact with the eyes, rinse thoroughly with water and obtain medical advice. Immediately take off any clothing stained with adhesive.

Never use PVC piping systems with compressed air or gas!

For further information refer to the leaflets and accident prevention regulations of the employers' liability insurance associations and the safety data sheets. Detailed information on safety requirements and workplace hygiene in connection with Tangit can be found in the leaflet "Working with Tangit".

DISPOSAL

Product remains must be disposed of as special waste. Only recycle well-emptied containers with dried-up adhesive residues and free of solvent vapours.

"The information provided in this Technical Data Sheet (TDS) including the recommendations for use and application of the product are based on our knowledge and experience of the product as at the date of this TDS. The product can have a variety of different applications as well as differing application and working conditions in your environment that are beyond our control. Henkel is, therefore, not liable for the suitability of our product for the production processes and conditions in respect of which you use them, as well as the intended applications and results. We strongly recommend that you carry out your own prior trials to confirm such suitability of our product. f.

Any liability in respect of the information in the Technical Data Sheet or any other written or oral recommendation(s) regarding the concerned product is excluded, except if otherwise explicitly agreed and except in relation to death or personal injury caused by our negligence and any liability under any applicable mandatory product liability law."

Henkel AG & Co. KGaA
Henkelstr. 67, D-40589 Düsseldorf, P.O. Box, D-40191 Düsseldorf
Phone: +49 (0) 211 / 797-0
Internet: www.tangit.com

This document was created and digitally signed by tdx.henkel.com at 2025-11-28T14:54:40.013Z